L F Schmidt

L. F. SCHMIDT
LICENSE
No. 43409
STATE OF FLORIDA
PROFESSIONAL ENGINEER

Digitally signed by Lyndon F Schmidt
Date: 2023.07.26 12:09:14 -04'00'

This item has been digitally signed and sealed by **L. F. Schmidt, P.E.** on the date adjacent to the seal.

Printed copies of this document are not considered signed and sealed and the signature must be verified on any electronic copies.

THIS PRODUCT APPROVAL IS VALID ONLY FOR THE STATE OF FLORIDA

ODL, Inc.

HP POLYPROPYLENE LITE KIT DOORGLASS ASSEMBLY FOR GLAZING UP TO A 3'0 x 8'0 SINGLE PANEL "NON-IMPACT"

GENERAL NOTES

1. This product has been evaluated and is in compliance with the 8th Edition (2023) Florida Building Code (FBC) structural requirements including the High Velocity Hurricane Zone (HVHZ).
2. When used in the "HVHZ" this product is required to be protected with an impact resistant covering that complies with Section 1626 of the FBC.
3. When used in areas outside the "HVHZ" requiring wind borne debris protection this product is required to be protected with an impact resistant covering that complies with FBC Sections 1609.1.2 & R301.2.1.2.
4. This product is approved for use as a substitute doorglass assembly in conjunction with a glazed steel or fiberglass side hinged swing door and/or fixed sidelite possessing a comparable current Florida Statewide product approval.
5. The design pressure (DP) rating shall be the lesser of the DP rating shown on sheet 1 of this approval or the DP rating shown in the glazed steel or fiberglass side hinged swing door or fixed sidelite approval being used.
6. The door panel and lite opening size shall not exceed the sizes shown in this approval or the glazed steel or fiberglass side hinged swing door or fixed sidelite approval being used.
7. This product has been tested in the door and/or sidelite panels as specified on sheets 3 & 4 of this approval. Substitution into a similar product may be approved for use by the local Authority Having Jurisdiction. In all cases, the glazed steel or fiberglass door and/or sidelite used must possess a comparable current Florida Statewide product approval.
8. This product meets the water infiltration requirements for the "HVHZ".

TABLE OF CONTENTS

SHEET #	DESCRIPTION
1	Typical elevations, design pressures and general notes
2	Glazing details and components
3	Horizontal and vertical cross sections
4	Anchoring locations & bill of materials
5	Fiberglass door panels
6	Steel door panels

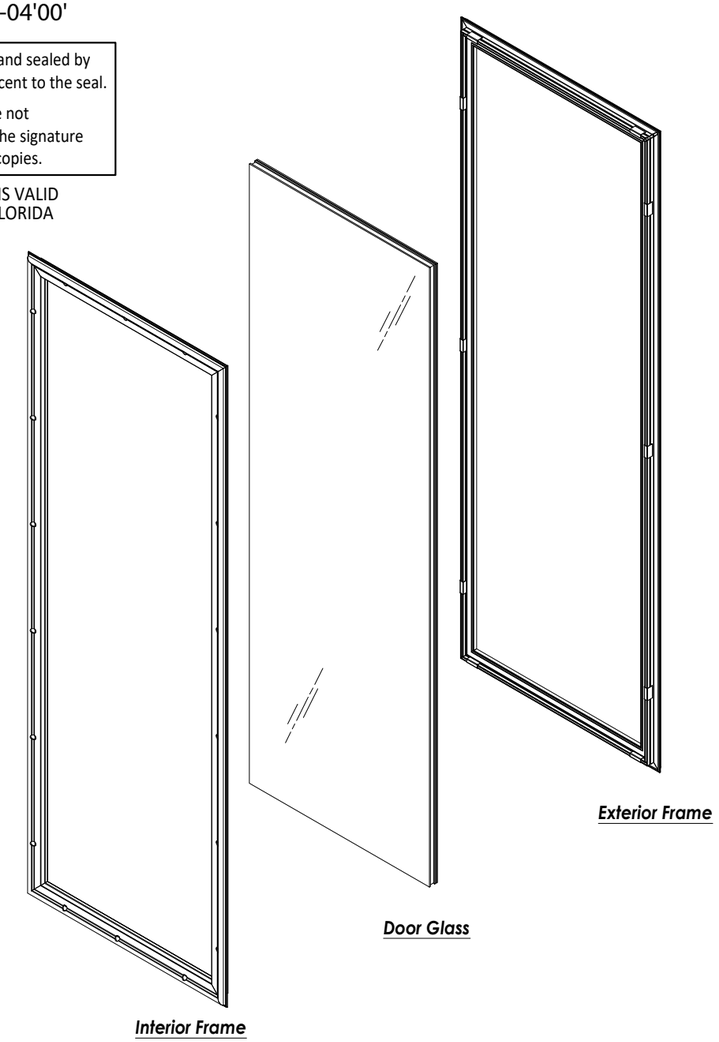

LIGHT DETAIL

DESIGN PRESSURE RATING (PSF)		
GLAZING TYPE TEMPERED	POSITIVE	NEGATIVE
1/8" MONO.	+60.0	-60.0
1/2" INSUL.	+60.0	-60.0
1" INSUL.	+60.0	-60.0

Documents Prepared By:
Lyndon F. Schmidt
P.E. No. 43409

R.W. BUILDING CONSULTANTS, INC.
P.O. Box 230, Valrico, FL 33595
Phone No.: 813.659.9197
FBPE Registry No. 9813

PRODUCT: ODL LITE FRAME

PART OR ASSEMBLY: TYPICAL ELEVATIONS, DESIGN PRESSURES & GENERAL NOTES

NO.	DATE	REVISIONS	BY
5	7/01/23	UPDATE TO 8TH ED. (2023) FBC	LFS
4	8/05/20	UPDATE TO 7TH ED. (2020) FBC	DAC
3	10/02/18	REVISE GLAZING DETAIL	LFS
2	9/26/17	UPDATE TO 6TH ED. (2017) FBC	JK
1	3/28/15	UPDATE TO 5TH ED. (2014) FBC	JK

DATE: 2/29/12
SCALE: N.T.S.
DWG. BY: JK
CHK. BY: LFS
DRAWING NO.: FL-15260.3
SHEET 1 OF 6

© 2012 R.W. BUILDING CONSULTANTS INC.

Z:\2023 FBC Drawings\ODL, Inc\FL-15260 R11\FL-15260.3.dwg

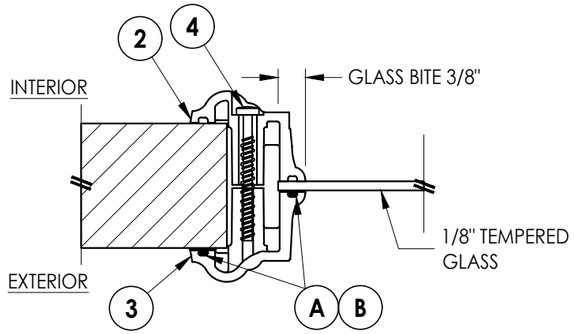

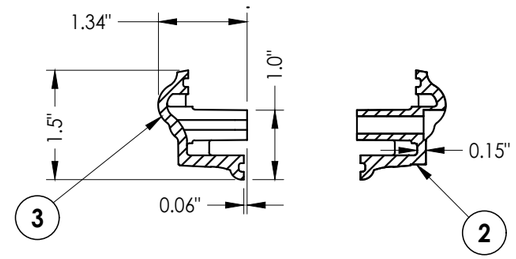

22" x 80" NOMINAL FRAME SIZE MAX.
(IN 8'-0" DOR PANEL)

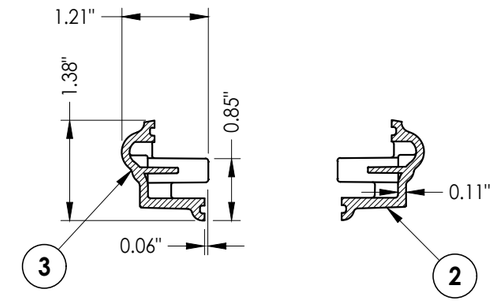

22" x 64" NOMINAL FRAME SIZE MAX.
(IN 6'-8" DOR PANEL)

G1 ***GLAZING DETAIL***

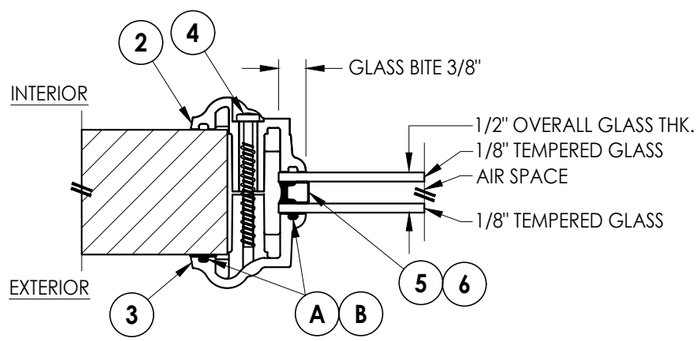

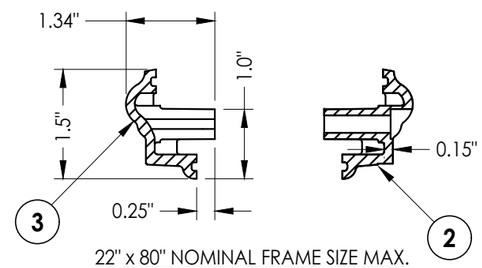

22" x 80" NOMINAL FRAME SIZE MAX.
(IN 8'-0" DOR PANEL)

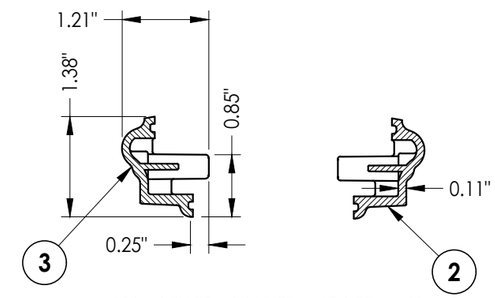

22" x 64" NOMINAL FRAME SIZE MAX.
(IN 6'-8" DOR PANEL)

G2 ***GLAZING DETAIL***

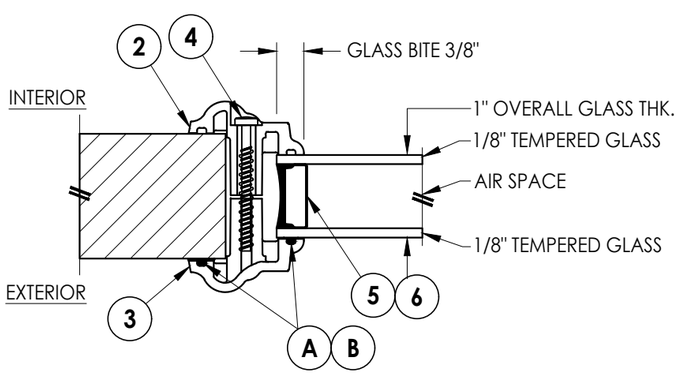

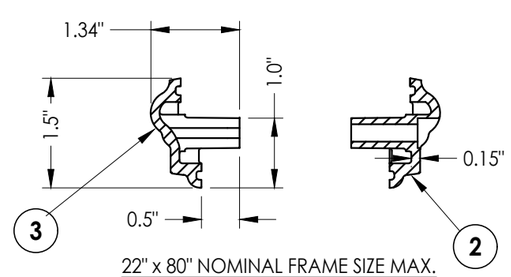

22" x 80" NOMINAL FRAME SIZE MAX.
(IN 8'-0" DOR PANEL)

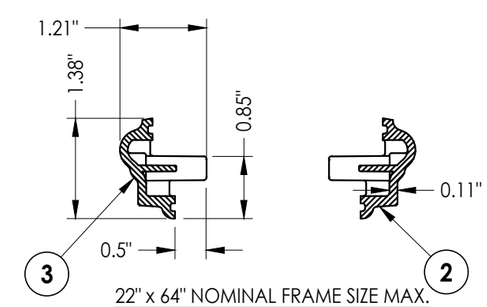

22" x 64" NOMINAL FRAME SIZE MAX.
(IN 6'-8" DOR PANEL)

G3 ***GLAZING DETAIL***

Documents Prepared By:
Lyndon F. Schmidt
P.E. No. 43409

RW BUILDING CONSULTANTS, INC.
P.O. Box 230, Valrico, FL 33595
Phone No.: 813.659.9197
FBPE Registry No. 9813

PRODUCT: *ODL LITE FRAME*

PART OR ASSEMBLY: *GLAZING DETAILS AND COMPONENTS*

REVISIONS

NO.	DATE		BY
5	7/01/23	UPDATE TO 8TH ED. (2023) FBC	LFS
4	8/05/20	UPDATE TO 7TH ED. (2020) FBC	DAC
3	10/02/18	REVISE GLAZING DETAIL	LFS
2	9/26/17	UPDATE TO 6TH ED. (2017) FBC	JK
1	3/28/15	UPDATE TO 5TH ED. (2014) FBC	JK

DATE: 2/29/12
SCALE: N.T.S.
DWG. BY: JK
CHK. BY: LFS
DRAWING NO.: FL-15260.3
SHEET 2 OF 6

© 2012 R.W. BUILDING CONSULTANTS INC.

Z:\2023 FBC Drawings\ODL, Inc\FL-15260 R11\FL-15260.3.dwg

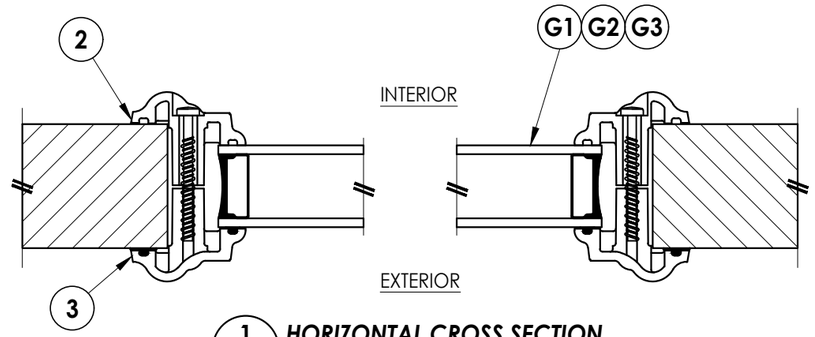

1/3 **HORIZONTAL CROSS SECTION**

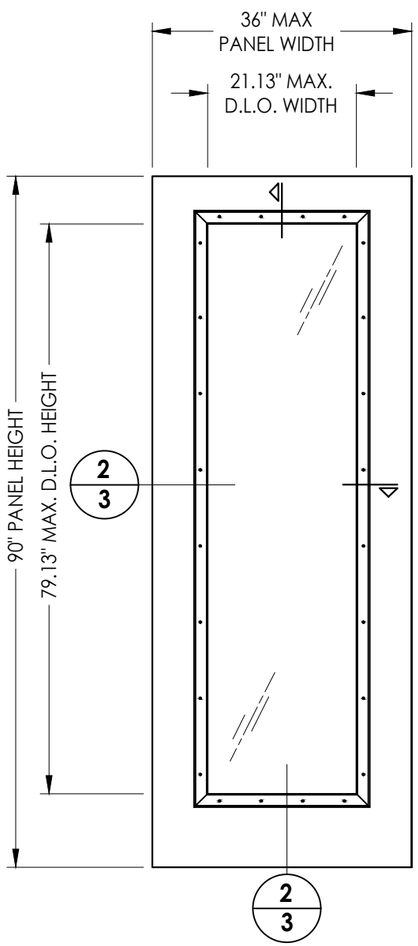

8'-0" DOOR PANEL

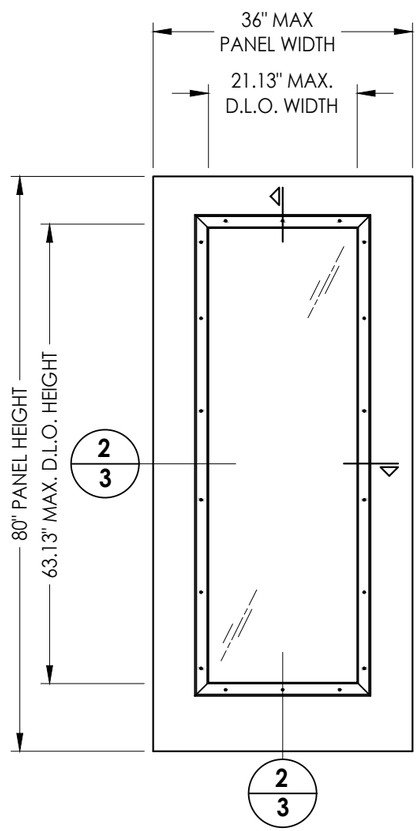

6'-8" DOOR PANEL

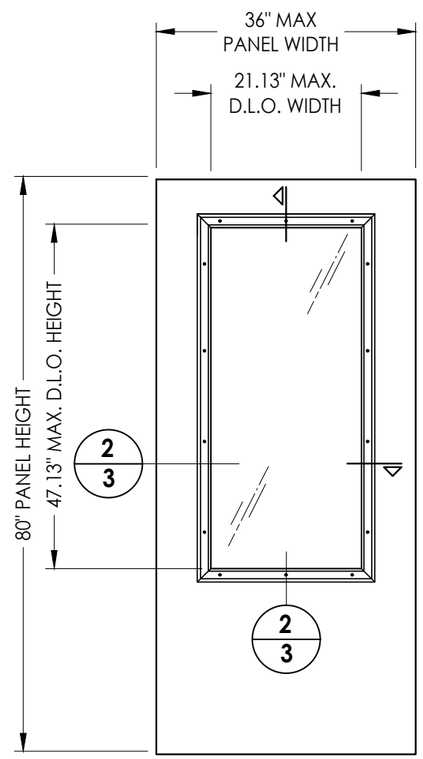

6'-8" DOOR PANEL

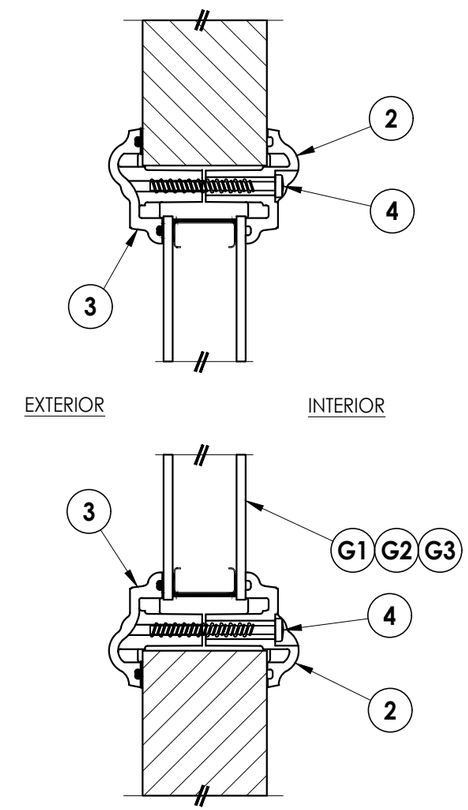

2/3 **VERTICAL CROSS SECTION**

Documents Prepared By:
Lyndon F. Schmidt
P.E. No. 43409

RW BUILDING CONSULTANTS, INC.
P.O. Box 230, Valrico, FL 33595
Phone No.: 813.659.9197
FBPE Registry No. 9813

PRODUCT: ODL LITE FRAME

PART OR ASSEMBLY: HORIZONTAL AND VERTICAL CROSS SECTIONS

NO.	DATE	REVISIONS	BY
5	7/01/23	UPDATE TO 8TH ED. (2023) FBC	LFS
4	8/05/20	UPDATE TO 7TH ED. (2020) FBC	DAC
3	10/02/18	REVISE GLAZING DETAIL	LFS
2	9/26/17	UPDATE TO 6TH ED. (2017) FBC	JK
1	3/28/15	UPDATE TO 5TH ED. (2014) FBC	JK

DATE: 2/29/12
SCALE: N.T.S.
DWG. BY: JK
CHK. BY: LFS
DRAWING NO.: FL-15260.3
SHEET 3 OF 6

© 2012 R.W. BUILDING CONSULTANTS INC.

Z:\2023 FBC Drawings\ODL, Inc\FL-15260 R11\FL-15260.3.dwg

BILL OF MATERIALS		
ITEM #	DESCRIPTION	MATERIAL
1A	ODL LITE FRAME (HP POLYPROPYLENE)	-
1B	ODL LITE FRAME (HP POLYPROPYLENE)	-
1C	ODL LITE FRAME (HP POLYPROPYLENE)	-
2	INT. FRAME (HP POLYPROPYLENE)	-
3	EXT. FRAME (HP POLYPROPYLENE)	-
4	#8 X 1-1/2" PPH SMS	STEEL
5	ALUMINUM GLAZING SPACER	ALUM
6	STEEL INTERCEPT SPACER	STEEL
A	FOAM-IN-PLACE GASKET (RESOLVE)	URETHANE
B	FOAM HOT-MELT (SURESEAL)	HOT-MELT

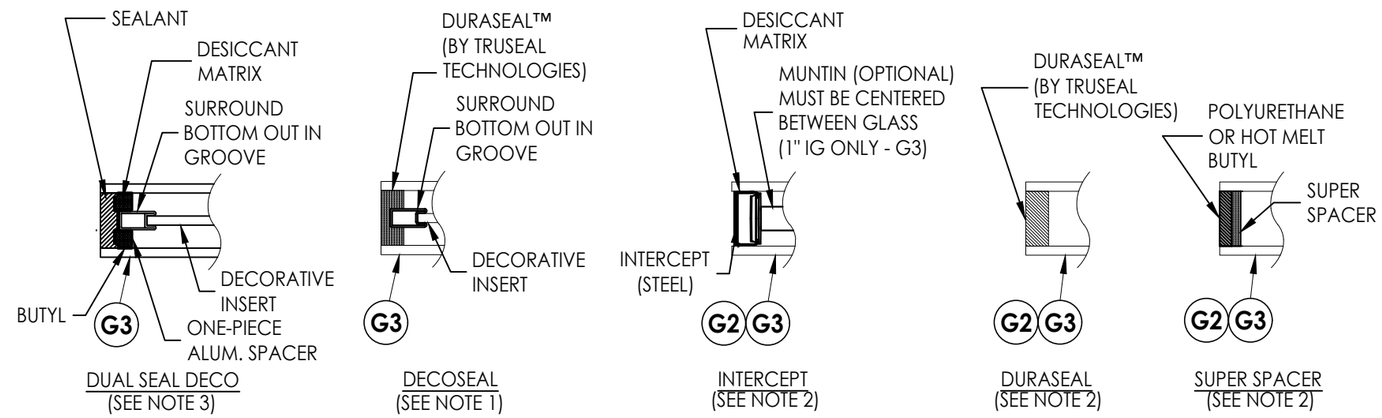

OPTIONAL GLAZING SPACER DETAILS

NOTES:
1. DECOSEAL GLAZING OPTION MAY BE INSTALLED IN ODL FRAME (1C) ONLY.
2. MAY BE INSTALLED IN ODL FRAMES (1A, 1B OR 1C).
3. DUAL SEAL DECO GLAZING OPTION MAY BE INSTALLED IN ODL FRAMES (1A OR 1B) ONLY.

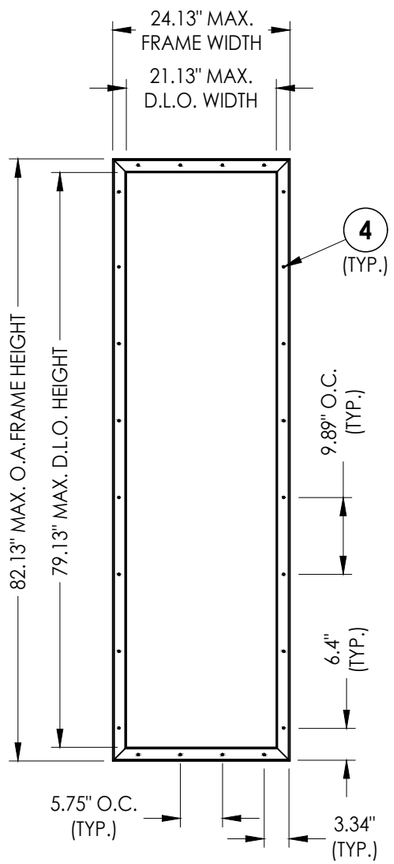

1A ODL LITE FRAME
Install in 8'-0" door panel

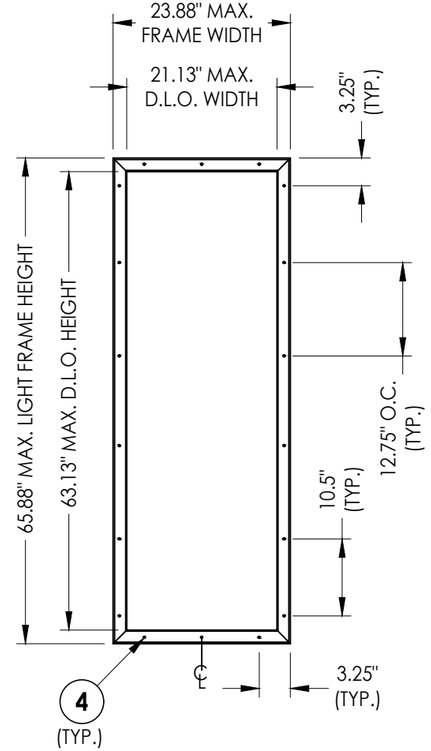

1B ODL LITE FRAME
Install in door panels up to 8'-0" max.

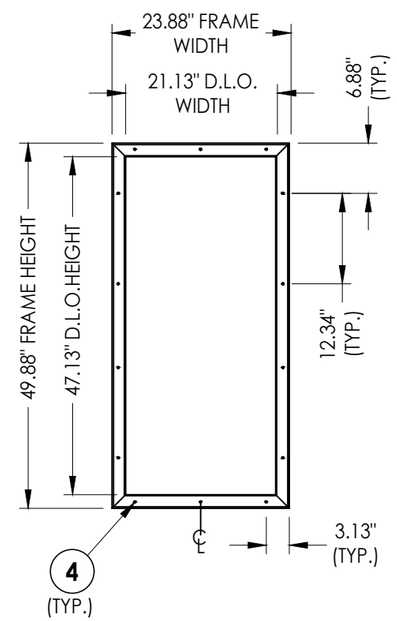

1C ODL LITE FRAME
Install in door panels up to 8'-0" max.

Documents Prepared By:
Lyndon F. Schmidt
P.E. No. 43409

RW BUILDING CONSULTANTS, INC.
P.O. Box 230, Valrico, FL 33595
Phone No.: 813.659.9197
FBPE Registry No. 9813

PRODUCT: ODL LITE FRAME

PART OR ASSEMBLY: ANCHORING LOCATIONS & BILL OF MATERIALS

NO.	DATE	REVISIONS	BY
5	7/01/23	UPDATE TO 8TH ED. (2023) FBC	LFS
4	8/05/20	UPDATE TO 7TH ED. (2020) FBC	DAC
3	10/02/18	REVISE GLAZING DETAIL	LFS
2	9/26/17	UPDATE TO 6TH ED. (2017) FBC	JK
1	3/28/15	UPDATE TO 5TH ED. (2014) FBC	JK

DATE: 2/29/12
SCALE: N.T.S.
DWG. BY: JK
CHK. BY: LFS
DRAWING NO.: FL-15260.3
SHEET 4 OF 6

© 2012 R.W. BUILDING CONSULTANTS INC.

Z:\2023 FBC Drawings\ODL, Inc\FL-15260 R11\FL-15260.3.dwg

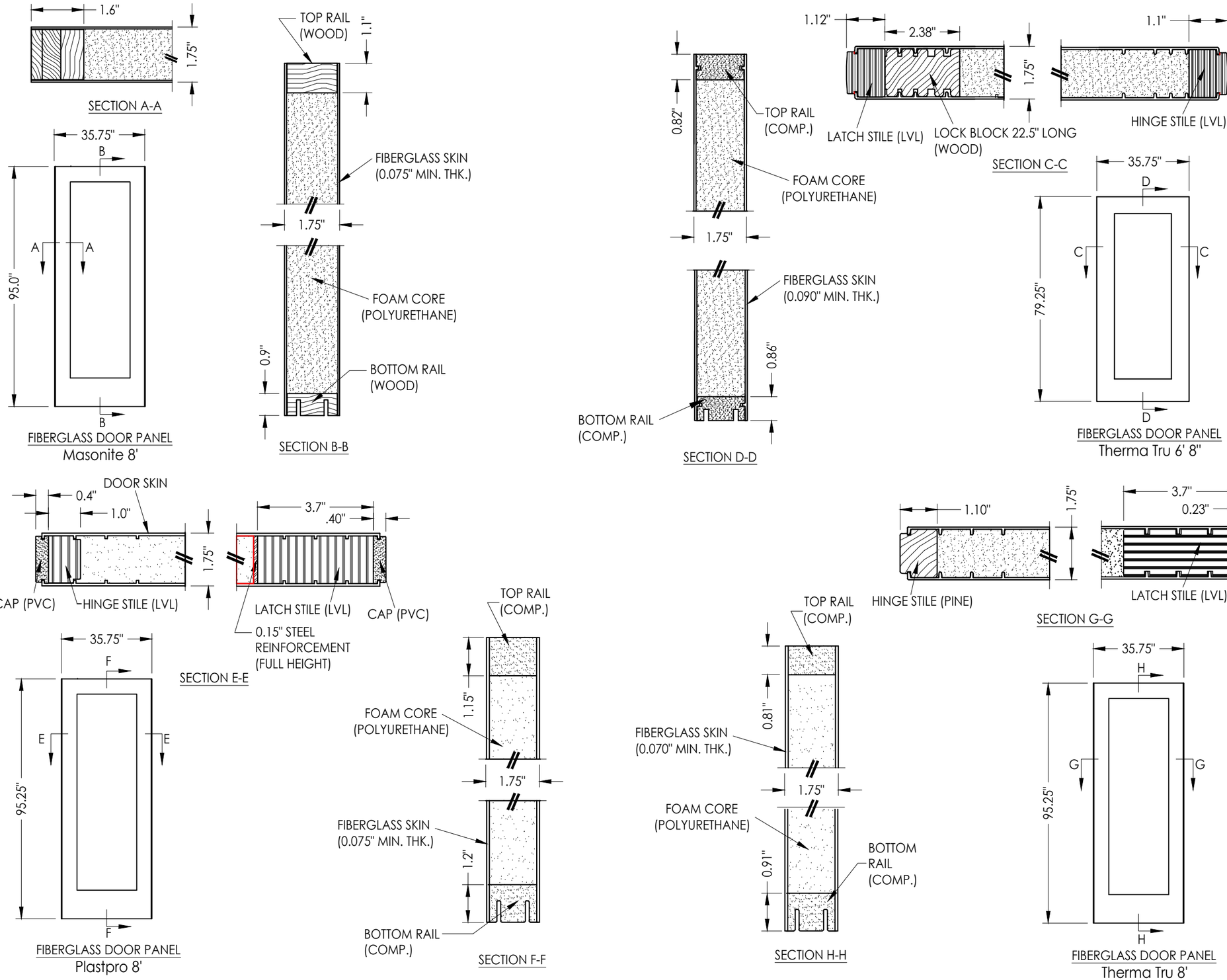

Documents Prepared By:
Lyndon F. Schmidt
P.E. No. 43409

RW BUILDING CONSULTANTS, INC.
P.O. Box 230, Valrico, FL 33595
Phone No.: 813.659.9197
FBPE Registry No. 9813

PRODUCT: ODL LITE FRAME

PART OR ASSEMBLY: FIBERGLASS DOOR PANELS

NO.	DATE	REVISIONS	BY
5	7/01/23	UPDATE TO 8TH ED. (2023) FBC	LFS
4	8/05/20	UPDATE TO 7TH ED. (2020) FBC	DAC
3	10/02/18	REVISE GLAZING DETAIL	LFS
2	9/26/17	UPDATE TO 6TH ED. (2017) FBC	JK
1	3/28/15	UPDATE TO 5TH ED. (2014) FBC	JK

DATE: 2/29/12
SCALE: N.T.S.
DWG. BY: JK
CHK. BY: LFS
DRAWING NO.: FL-15260.3
SHEET 5 OF 6

© 2012 R.W. BUILDING CONSULTANTS INC.

Z:\2023 FBC Drawings\ODL, Inc\FL-15260 R11\FL-15260.3.dwg

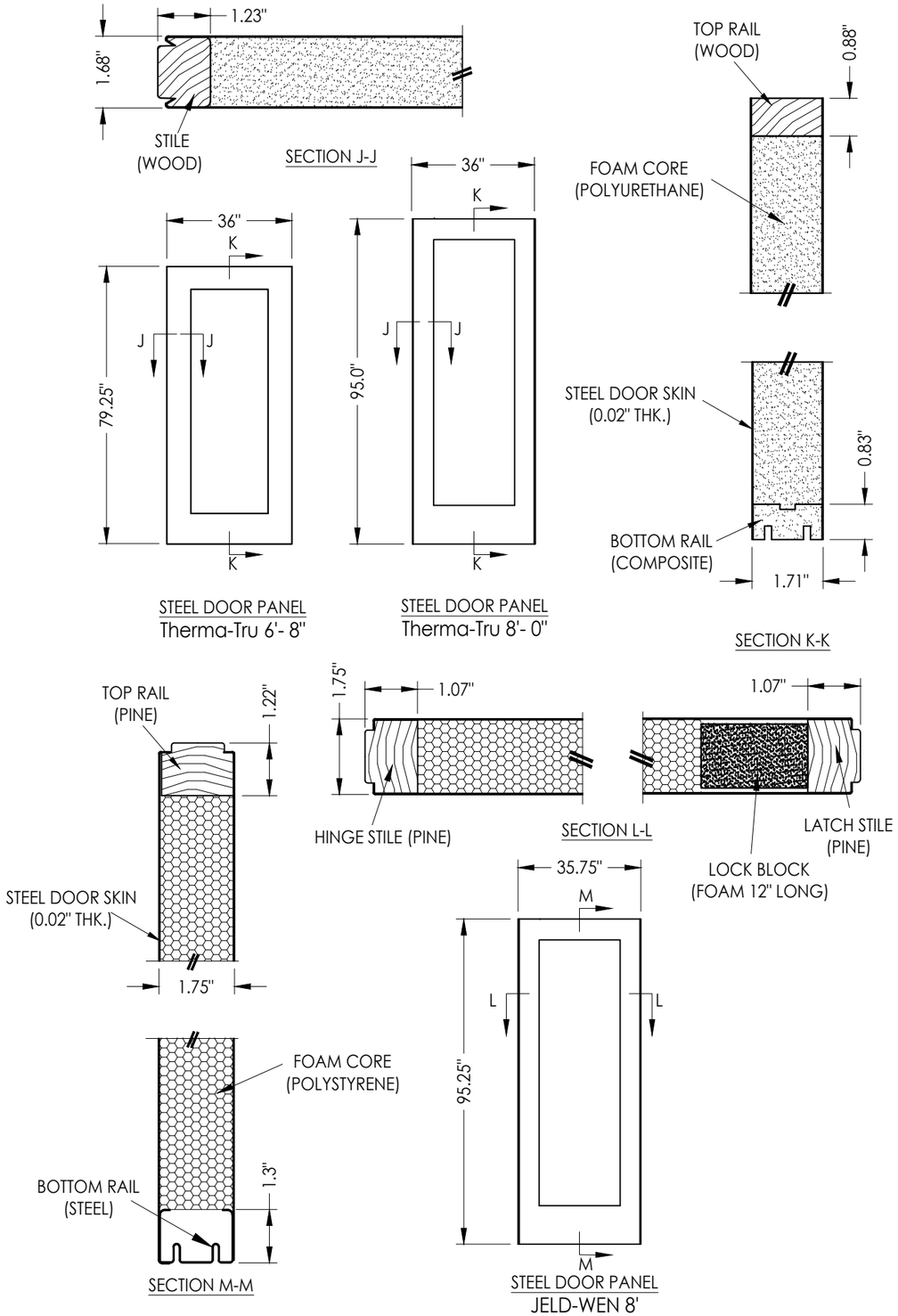

Documents Prepared By:
Lyndon F. Schmidt
P.E. No. 43409

RW BUILDING CONSULTANTS, INC.
P.O. Box 230, Valrico, FL 33595
Phone No.: 813.659.9197
FBPE Registry No. 9813

PRODUCT: *SMART FRAME*

PART OR ASSEMBLY: *STEEL DOOR PANELS*

REVISIONS

NO.	DATE		BY
5	7/01/23	UPDATE TO 8TH ED. (2023) FBC	LFS
4	8/05/20	UPDATE TO 7TH ED. (2020) FBC	DAC
3	10/02/18	REVISE GLAZING DETAIL	LFS
2	9/26/17	UPDATE TO 6TH ED. (2017) FBC	JK
1	3/28/15	UPDATE TO 5TH ED. (2014) FBC	JK

DATE: 2/29/12
SCALE: N.T.S.
DWG. BY: JK
CHK. BY: LFS
DRAWING NO.: FL-15260.3
SHEET 6 OF 6

© 2012 R.W. Building Consultants Inc.

Z:\2023 FBC Drawings\ODL, Inc\FL-15260 R11\FL-15260.3.dwg